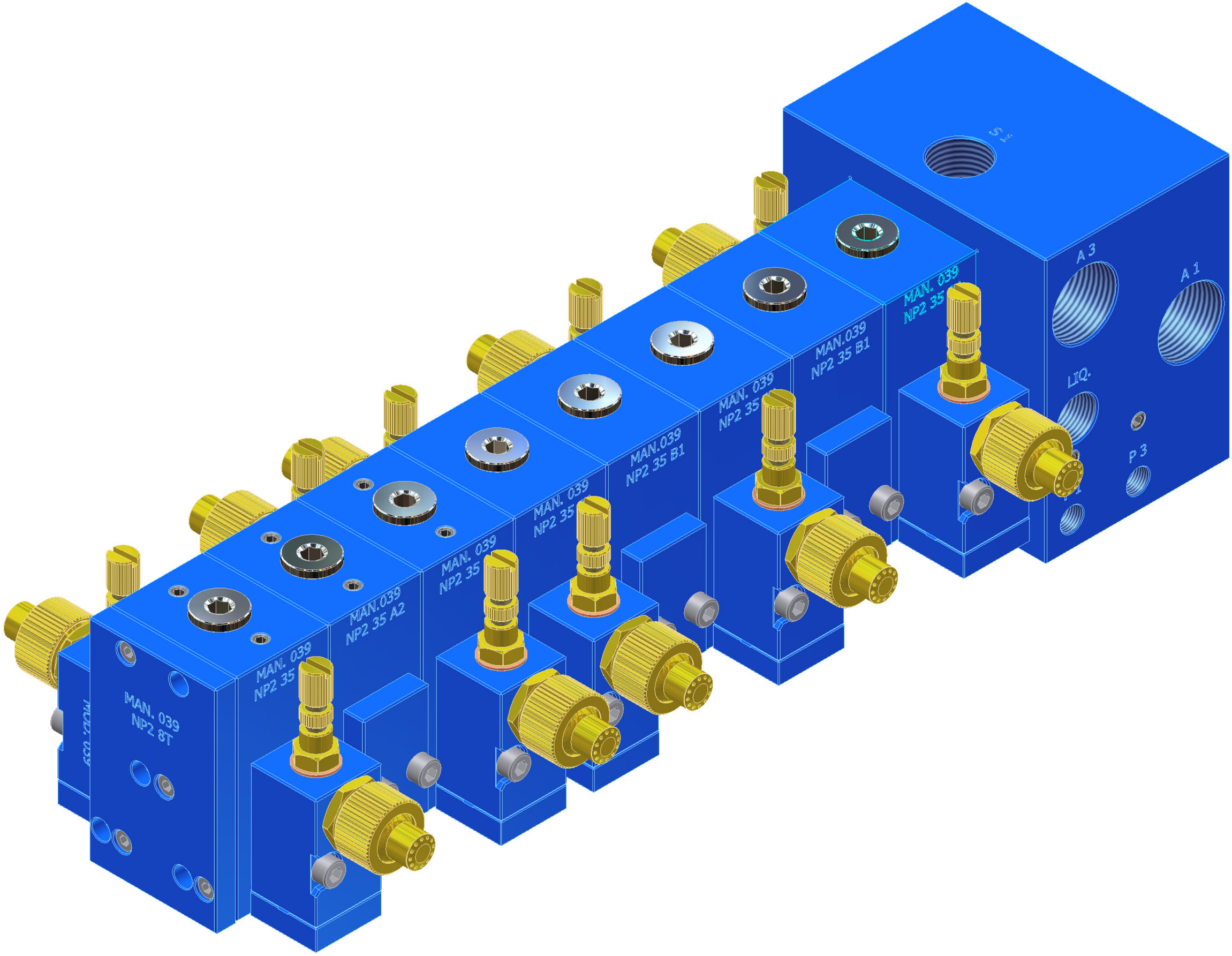
S 1
A 3
A 1
LIQ.
P 3
MAN. 039
NP2 35
MAN.039
NP2 35 B1
MAN. 039
NP2 35
MAN.039
NP2 35 B1
MAN. 039
NP2 35
MAN. 039
NP2 35
MAN.039
NP2 35 A2
MAN. 039
NP2 35
MAN. 039
NP2 8T

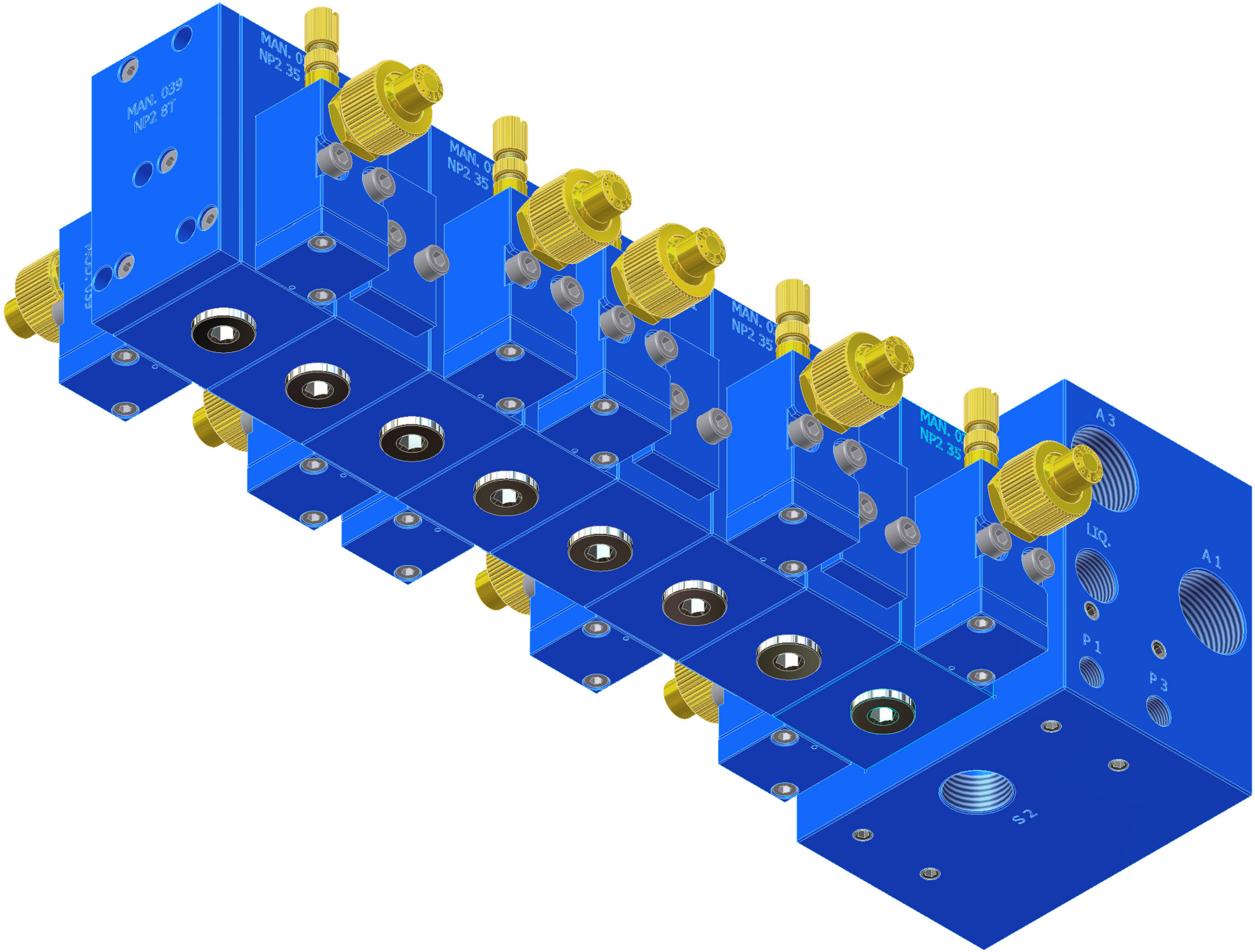
MAN. 039
NP2 8T
MAN. 0
NP2 35
MAN. 0
NP2 35
MAN. 0
NP2 35
MAN. 0
NP2 35
A 3
LIQ.
A 1
P 1
P 3
S 2

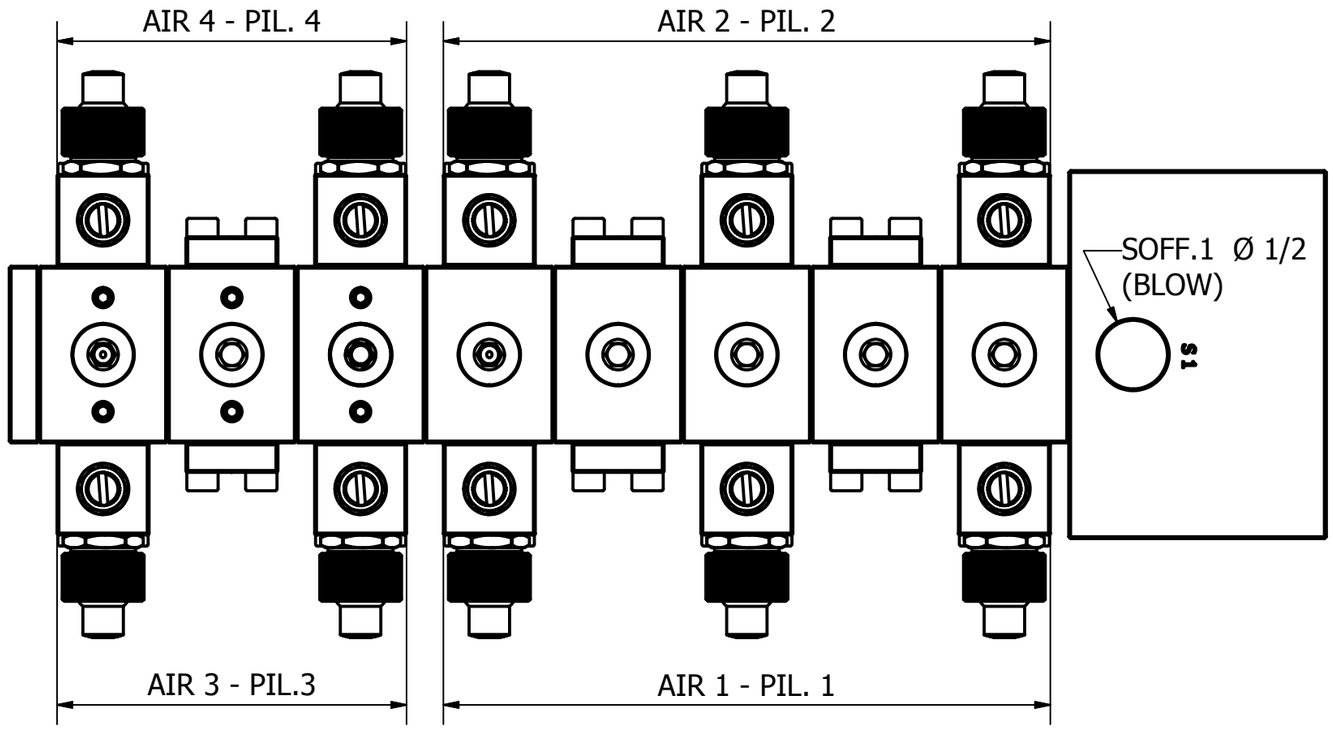

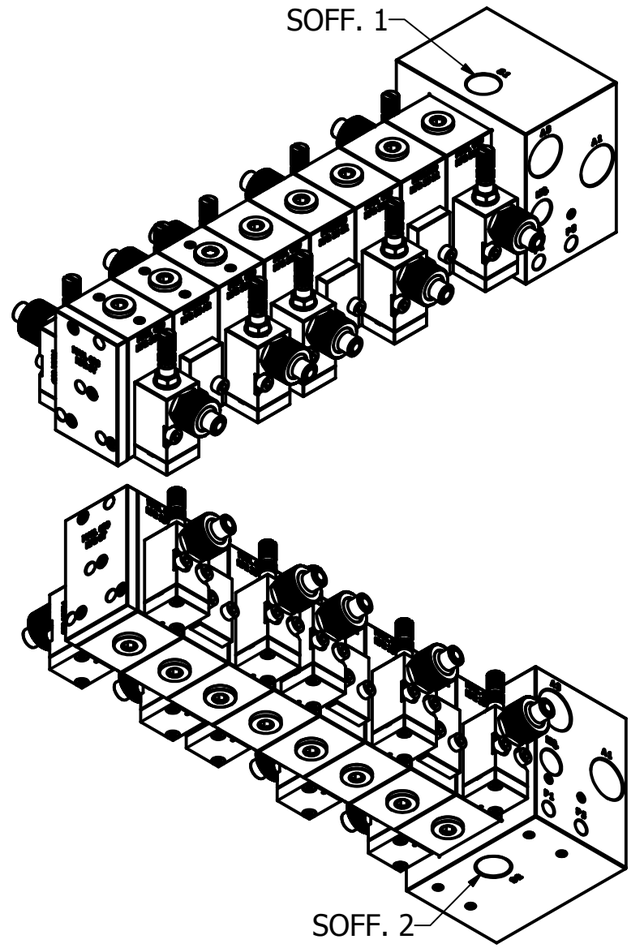

AIR 1 Ø 3/4
AIR 2 Ø 3/4
AIR 3 Ø 3/4
AIR 4 Ø 3/4

LIQ. P.M.Ø 3/8
LIQ. P.F. Ø 3/8

PIL. 1 Ø 1/8
PIL. 2 Ø 1/8
PIL. 3 Ø 1/8
PIL. 4 Ø 1/8

SOFF. (BLOW) 1 Ø 1/2
SOFF. (BLOW) 2 Ø 1/2

PESO Kg 5,6

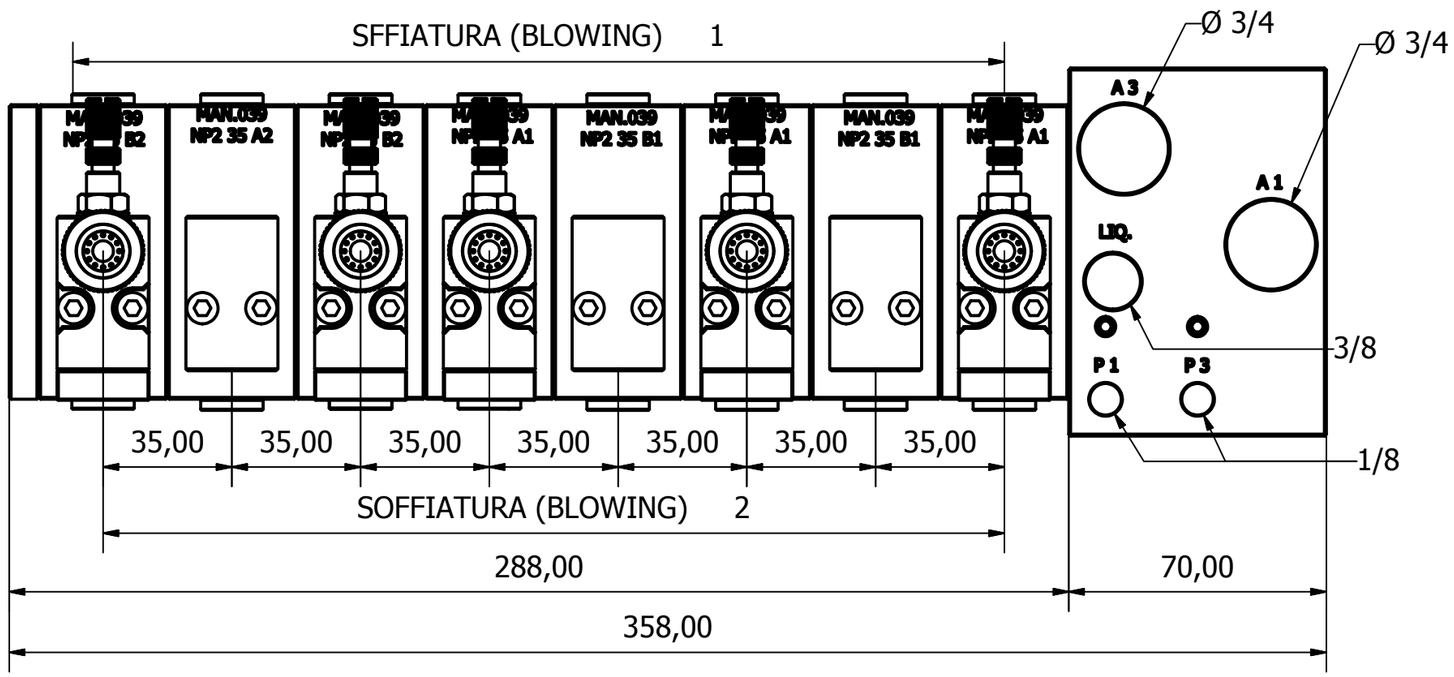

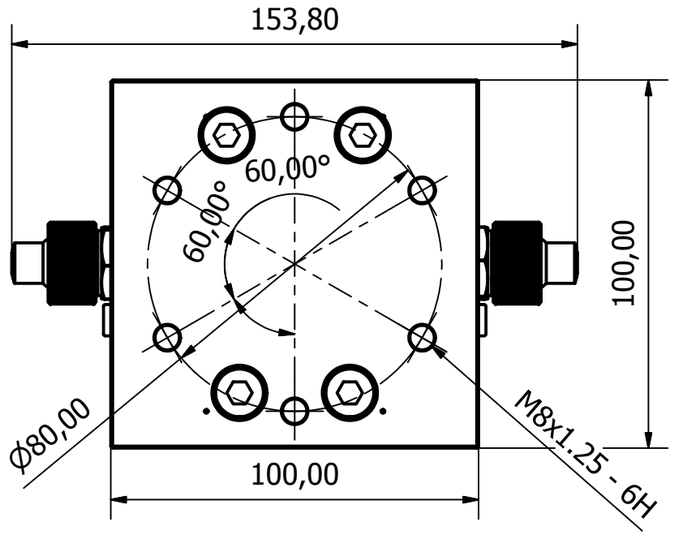

MAN. 039 NP 2 8 Posizioni